特別交通消息的數據格式

概要圖

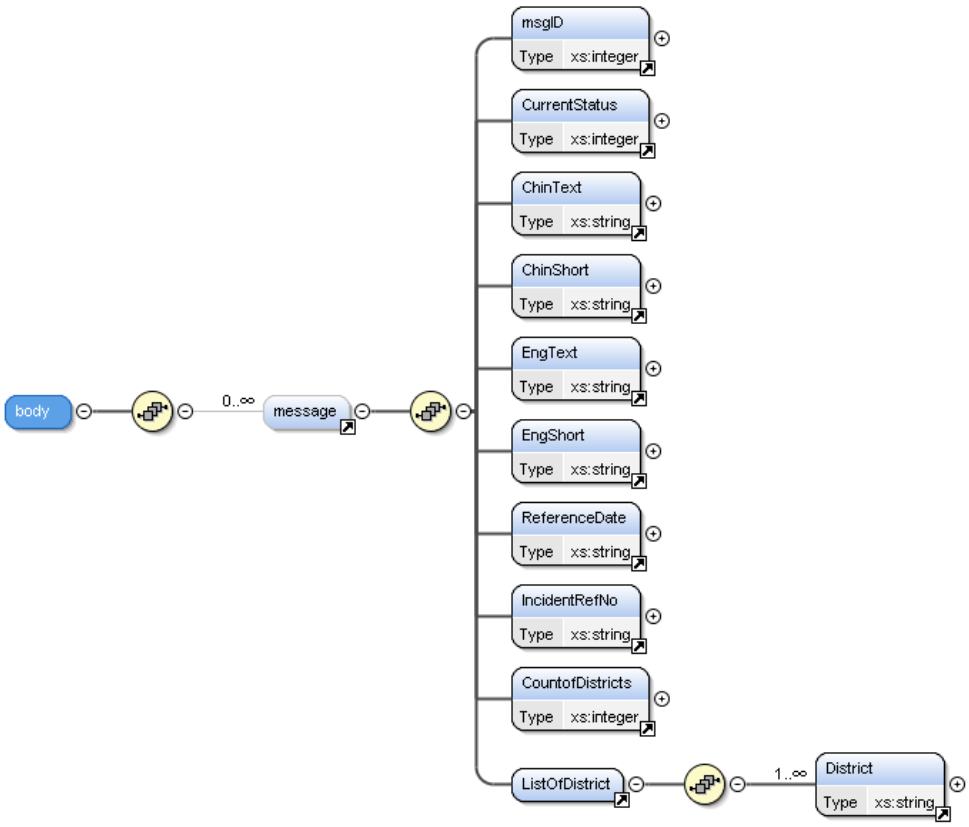

XML 樣本

```
<?xml version='1.0' encoding='utf-8'?>
<body>
    <message>
        <msgID> {the message id} </msgID>
        <CurrentStatus> {the status code} </CurrentStatus>
        <ChinText> {Message text (long) in Chinese} </ChinText>
        <ChinShort> {Message text (short) in Chinese} </ChinShort>
        <EngText> {Message text (long) in English} </EngText>
        <EngShort> {Message text (short) in English} </EngShort>
        <ReferenceDate> {Date} </ReferenceDate>
        <IncidentRefNo> {the IncidentRefNo (internal use only, please ignore)} </IncidentRefNo>
        <CountofDistricts> {number of districts this message applied to} </CountofDistricts>
        <ListOfDistrict>
            <District> {name of district this message applied to} </ District>
            …
            …
        </ListOfDistrict>
    </message>
    …
    …
</body>
```